Summary in Graph

Exam Summary (GO Classes GATE CS | Computer Networks | Weekly Quiz 7)

Qs. Attempted:	0 (0 + 0)
Correct Attempts:	0 (0 + 0)
Incorrect Attempts:	0 (0 + 0)
Correct Marks:	0 (0 + 0)
Penalty Marks:	0 (0 + 0)
Resultant Marks:	0 (0 + 0)

Total Questions:	15 (10 + 5)
Total Marks:	20 (10 + 10)
Exam Duration:	45 Minutes
Time Taken:	0 Minutes

Individual Question Statistics

Select Metric: Marks Obtained

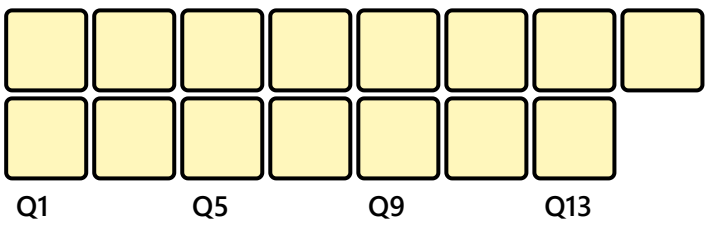

* Average Stats based on first-attempt stats of Top 10% (13) out of 132 users

EXAM RESPONSE EXAM STATS FEEDBACK

Technical

Q #1 Multiple Choice Type Award: 1 Penalty: 0.33 Computer Networks

Consider a CRC in which the generator polynomial is 11 (binary). What does this CRC effectively implement?

A. It detects only single-bit errors

B. It ensures detection of all 2-bit errors

C. It works as a parity bit, detecting errors based on the number of 1's

D. It detects all burst errors of length less than or equal to 2

Your Answer: | Correct Answer: C | Not Attempted | Time taken: 00min 01sec | Discuss

Q #2 | Multiple Choice Type | Award: 1 | Penalty: 0.33 | Computer Networks

Consider the following small network: Hosts $\mathbf{A}$ and $\mathbf{B}$ are connected to a router $\mathbf{R}$ through a switch $\mathbf{S}$. Host $\mathbf{C}$ connects directly to router $\mathbf{R}$. There is no other host, switch, or router in the network.

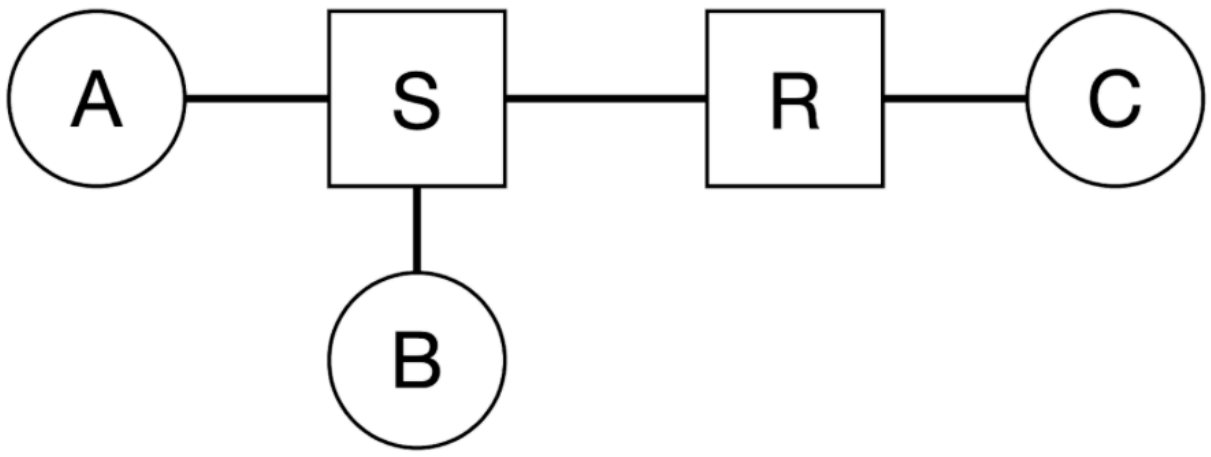

What is the maximum number of entries that could appear in the ARP table of host A? Which entities would those entries correspond to?

A. 1 entry - only B

B. 1 entry - only R

C. 2 entries - B and R

D. 3 entries - B, R, and C

Your Answer: | Correct Answer: C | Not Attempted | Time taken: 00min 00sec | Discuss

Q #3 | Multiple Choice Type | Award: 1 | Penalty: 0.33 | Computer Networks

Which of the following is TRUE, if a duplicate ACK is received by a TCP sender?

A. The TCP sender will always retransmit a packet.

B. The TCP receiver must have received the same segment more than once.

C. The TCP sender will always ignore the duplicate ACK silently.

D. None of the other choices.

Your Answer: | Correct Answer: D | Not Attempted | Time taken: 00min 00sec | Discuss

Q #4 | Multiple Select Type | Award: 1 | Penalty: 0 | Computer Networks

Assume that a host A with IP $172.26.184.3$ is on a private home network, located behind a NAT home router R. Host A sends a datagram to destination host $128.119.40.186$, port 80 , through R. When R forwards the datagram it will replace the sender's IP and port number. Which of the following IP, port combinations would be valid to use by R ?

A. $172.26.184.5$, 3001

B. $192.168.1.1$, 2001

C. $128.125.3.4$, 3001

D. $152.148.5.6$, 3001

Your Answer: | Correct Answer: C;D | Not Attempted | Time taken: 00min 00sec | Discuss

Q #5 | Multiple Choice Type | Award: 1 | Penalty: 0.33 | Computer Networks

The Ethernet CSMA/CD protocol uses an exponential backoff algorithm. Suppose a datagram has already experienced 4 collisions. The sender will randomly choose a backoff value $\mathbf{K}$ in which of the following ranges and then wait for $\mathrm{K} \times 512$ bit times before retransmission?

A. 0 to 7 (inclusive)

B. 0 to 15 (inclusive)

C. 1 to 15 (inclusive)

D. 0 to 31 (inclusive)

Your Answer: | Correct Answer: B | Not Attempted | Time taken: 00min 00sec | Discuss

Q #6 | Multiple Choice Type | Award: 1 | Penalty: 0.33 | Computer Networks

In the given network diagram, Ethernet interface addresses ($\mathrm{e1}, \mathrm{e2}, \ldots$) are written on the diagram itself. Host 1 uses interface $\mathbf{e1}$ with IP address IP H1, and Host 4 uses interface $\mathbf{e4}$ with IP address IP H4. The router has interface e5 on Network 1 and interface e6 on Network 2.

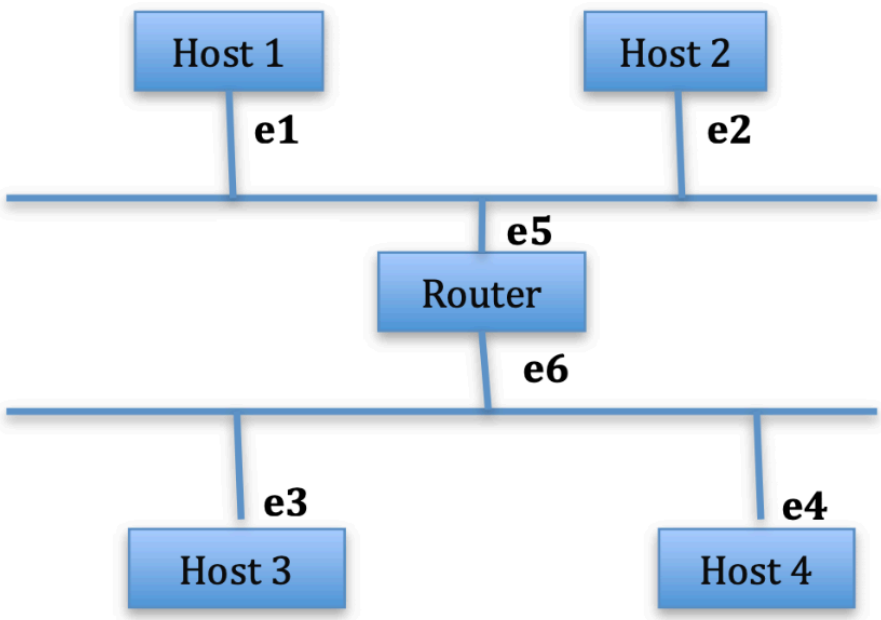

When Host 1 sends an IP packet to Host 4, what are the correct Ethernet and IP source/destination addresses in the frame that traverses Network 2?

A. Eth Src: e6 | Eth Dest: e4 | IP Src: IP H1 | IP Dest: IP H4

B. Eth Src: e1 | Eth Dest: e4 | IP Src: IP H1 | IP Dest: IP H4

C. Eth Src: e5 | Eth Dest: e4 | IP Src: IP H1 | IP Dest: IP H4

D. Eth Src: e4 | Eth Dest: e6 | IP Src: IP H4 | IP Dest: IP H1

Your Answer: | Correct Answer: A | Not Attempted | Time taken: 00min 00sec | Discuss

Q #7 | Multiple Choice Type | Award: 1 | Penalty: 0.33 | Computer Networks

Suppose a router receives an IP packet containing 600 data bytes and has to forward the packet to a network with a maximum transmission unit of 200 bytes. Assume that the IP header is 20 bytes long. What are fragment offset values for divided packets?

A. $22, 44, 66, 88$

B. $0, 22, 44$

C. $0, 22, 44, 66$

D. $22, 44, 66$

Your Answer: | Correct Answer: C | Not Attempted | Time taken: 00min 00sec | Discuss

Q #8 | Numerical Type | Award: 1 | Penalty: 0 | Computer Networks

In a Go-Back-N ARQ protocol with a sender window size of 7, what is the necessary and sufficient number of distinct sequence numbers required to ensure correct protocol operation and avoid ambiguity at the wrap-around point?

Your Answer: | Correct Answer: 8 | Not Attempted | Time taken: 00min 00sec | Discuss

Q #9 | Multiple Choice Type | Award: 1 | Penalty: 0.33 | Computer Networks

A sender is using the Go-Back-N protocol with:

- Window size $= 4$
- One shared retransmission timer (timeout = 25)
- Packets are acknowledged cumulatively
- The channel may lose packets but never reorders them

At time = 6:

- Packets with sequence numbers$2, 3$, and 4 are unacknowledged and waiting in the buffer.
- The next packet to be sent will carry sequence number 5.
- The retransmission timer is set to expire at time $= 10$.

At time $= 7$, the application generates a new packet with sequence number 5.

At time = 12, an acknowledgement for all packets up to sequence number 3 is received.

At time $= 13$, the sender still has packets 4 and 5 unacknowledged, and the next packet to be sent will carry sequence number 6 . The retransmission timer is now set to expire at time $= 35$.

Which packets are actually transmitted between time $= 6$ and time $= 13$ (in the correct order)?

A. $\{2, 3, 4, 5\}$

B. $\{5, 2, 3, 4, 5\}$

C. $\{2, 3, 5, 4\}$

D. $\{5, 4, 5\}$

Your Answer: | Correct Answer: B | Not Attempted | Time taken: 00min 00sec | Discuss

Q #10 | Multiple Choice Type | Award: 1 | Penalty: 0.33 | Computer Networks

A network is arranged as follows: Node $\mathbf{A} \rightarrow$ Node $\mathbf{B} \rightarrow$ Node $\mathbf{C}$.

- Total data to send from A to $C = \mathbf{12P}$ bits.
- Each packet requires a header of $\mathbf{P}$ bits.
- Link $\mathrm{A} - \mathrm{B}$ and link $\mathrm{B} - \mathrm{C}$ are identical, with
- Bandwidth = R bits/sec
- Link propagation speed = S meters/sec
- Link length = D meters
- Queuing and processing delays are negligible.

If all $12\mathrm{P}$ bits are sent in a single packet (including the header), what is the total delay for the entire data to reach C?

A. $12\mathrm{P}/\mathrm{R} + 2\mathrm{D}/\mathrm{S}$

B. $13\mathrm{P}/\mathrm{R} + 2\mathrm{D}/\mathrm{S}$

C. $21\mathrm{P}/\mathrm{R} + 2\mathrm{D}/\mathrm{S}$

D. $26\mathrm{P}/\mathrm{R} + 2\mathrm{D}/\mathrm{S}$

Your Answer: | Correct Answer: D | Not Attempted | Time taken: 00min 00sec | Discuss

Q #11 | Multiple Choice Type | Award: 2 | Penalty: 0.67 | Computer Networks

A source sends 12P bits of data from node A to node C via node B.

- The path has two identical links (A-B and B-C).

- Each link has a bandwidth of $\mathbf{R}$ bits/sec, a propagation speed of $\mathbf{S}$ meters/sec, and length $\mathbf{D}$ meters.
- Each packet requires a header of size $\mathbf{P}$ bits.
- Queuing and processing delays are negligible.

If the $12P$ bits are divided into $\mathbf{k}$ equal packets, then each packet has size $= (12P/k + P)$ bits.
What is the optimal value of $\mathbf{k}$ that minimizes the total end-to-end delay for all data to arrive at C ?

A. $k = \sqrt{12}$

B. $k = 6$

C. $k = 12$

D. $k = \sqrt{13}$

Your Answer: | Correct Answer: A | Not Attempted | Time taken: 00min 00sec | Discuss

Q #12 | Multiple Choice Type | Award: 2 | Penalty: 0.67 | Computer Networks

Two hosts **X** and **Y** are communicating over an ongoing TCP connection. Each TCP segment carries **100 bytes** of application data. The first segment sent by **X** has sequence number 30 and ACK number 70.

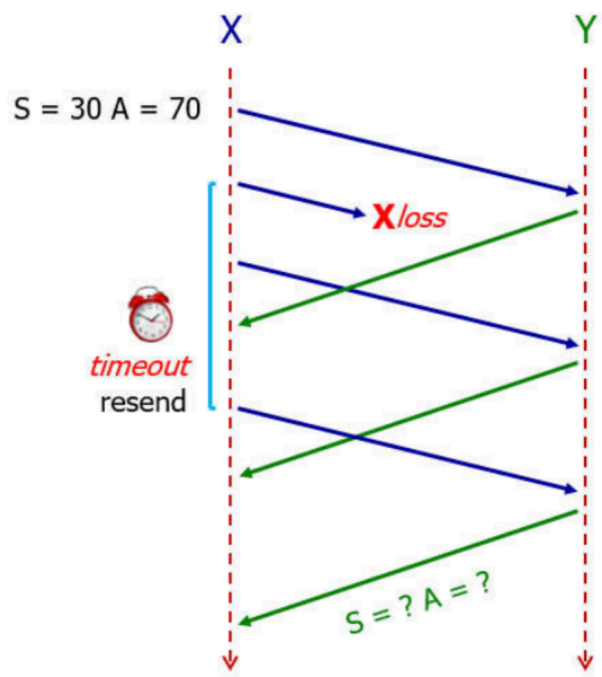

- The **second segment sent by X is lost**.
- It is later **retransmitted when the associated timer expires**.
- No other segments are retransmitted, none are corrupted, and the receiver buffers out-of-order packets correctly.

Determine the *Sequence Number* S and *Acknowledgement Number* A in the final TCP segment sent by **X** in the diagram, after the timeout-based retransmission succeeds.

A. $S = 170,\ A = 230$

B. $S = 270,\ A = 330$

C. $S = 270,\ A = 230$

D. $S = 170,\ A = 330$

Your Answer: | Correct Answer: B | Not Attempted | Time taken: 00min 00sec | Discuss

Q #13 Multiple Choice Type | Award: 2 | Penalty: 0.67 | Computer Networks

Consider the following **receiver pseudocode** for a stop-and-wait protocol.
The channel may *lose* or *corrupt* packets but, if a packet is delivered, it arrives *in order*.

```
p = receive_packet()

while (p is corrupted OR p.seq ≠ expected_seq):
    p = receive_packet()    // keep waiting until the expected,
                            // uncorrupted packet arrives

send_ack(p.seq)
expected_seq = 1 - expected_seq   // flip expected between 0 and 1
deliver_data(p)

```

- `expected_seq` is the sequence number (either 0 or 1) that the receiver is waiting for.
- `deliver_data(p)` extracts and returns the payload from packet `p` to upper layer.
- The **receiver waits forever** if it is blocked inside, `receive_packet()` awaiting a packet that will never be sent.
- The **sender loops forever** if it keeps retransmitting the same packet indefinitely.

Which of the following statements is correct?

A. A single *corrupted data packet* can cause the **sender** to loop forever.

B. A single *corrupted data packet* can cause the **receiver** to wait forever.

C. A single *lost ACK* can cause the **sender** to loop forever.

D. A single *lost ACK* can cause the **receiver** to wait forever.

Your Answer: | Correct Answer: C | Not Attempted | Time taken: 00min 00sec | Discuss

Q #14 Numerical Type | Award: 2 | Penalty: 0 | Computer Networks

An IP packet of 552 bytes (20-byte IP header + 20-byte TCP header) must traverse two networks in sequence:

- Network 1 with MTU = 300 bytes
- Network 2 with MTU = 100 bytes

After all necessary fragmentations, the packet reaches the destination in multiple pieces.

How many fragments are finally delivered to the destination?

Your Answer: | Correct Answer: 8 | Not Attempted | Time taken: 00min 00sec | Discuss

Q #15 Multiple Choice Type | Award: 2 | Penalty: 0.67 | Computer Networks

A network of 4 routers $\mathrm{A}, \mathrm{B}, \mathrm{C}$ and D is arranged as shown below. The routers use the distance vector routing, using the number of hops as the metric. The value "8" is used by all routers to indicate "infinity" (to conclude that a router is unreachable).

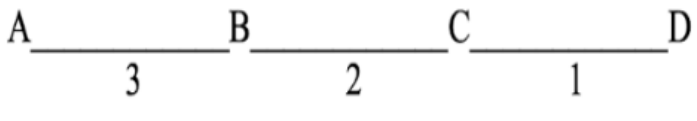

In each round, all nodes exchange their distance vectors with their respective neighbours. Then all nodes update their distance vectors. In between two rounds, any change in cost of a link will cause the two incident nodes to change only that entry in their distance vectors.

The link C-D goes down. How many exchanges would it require for each of them to conclude that D is unreachable?

A. 1

B. 2

C. 3

D. 4

Your Answer: | Correct Answer: C | Not Attempted | Time taken: 00min 00sec | Discuss

Copyright & Stuff